AQUATru® BY IDEAL LIVING PRO SERIES

Model# 90AT01WF01B

On-Wall Bottle Filler with Bubbler

Product Description

The Aquatru Pro Series On-Wall Bottle Filler with Bubbler is designed to be wall-mounted, filtered, and refrigerated. Bottle Filler shall be built with a Stainless-Steel exterior, with a cooling system using R290 refrigerant, and able to produce 9.5 GPH of chilled water under ASHRAE 18 standard testing.* The filter shall reduce Chlorine, PFAS/PFOS, Cyst, Taste and Odor, Lead, and Particulate Class 1. Bottle Filler shall have a digital bottle count display indicating the number of 16 oz plastic bottles saved. Bottle count shall be measured by a metered flow meter. Bottle Filler shall have a visual filter display indicating filter status and need for replacement. Unit shall be rated for indoor installation or outdoor in covered applications. Shall be furnished with bubbler activated by a touch-free motion sensor.

Product Specifications

Water	Refrigerated only
Filter Stages	Sediment and Carbon
Finish	Stainless Steel and Textured Plastic
Power	120 VAC 60hz
Activation by	IR Sensors
No. of Stations Served	1
Mounting Type	Wall Mounted
Chilling Capacity*	9.5 GPH
Cooling Power	440W
Dimensions (L x W x H)	20" X 18.75" X 40"
Approx. Shipping Weight	70lbs
Installation Location	Indoor and Outdoor while covered
Rated Flow Rate	1 GPM

*Chilling capacity is based on ASHRAE 18 testing conditions with 80°F inlet water and 90°F Ambient temperature.

Certified to UL399 by SGS

Certified to NSF/ANSI 42, 53, 61 (Q≤1), & 372 (lead free), ASME - A112.19.3/CSA B45.4, and CAN/CSA C22.2 No. 120 by IAPMO R&T

Complies with ADA & ICC A117.1 accessibility requirements when installed according to the requirements outlined in these standards. Installation may require additional components and/or construction features to be fully compliant. Consult the local authority having jurisdiction if necessary.

Cooling System:

- Compressor: Hermetically sealed, reciprocating type. Sealed in lifetime lubrication.
- Condenser: Dual DC fan cooled copper tube aluminum fin radiator.
- Refrigerant Control: Refrigerant R290 (Propane) is controlled by a calibrated capillary tube.
- Temperature Control: Easily Accessed internal thermostat.

Visual Filter Monitor:

- LED Filter Status Indicator for when a filter change is necessary.
- Filter is certified to NSF 42 and 53 for Lead, Cyst, Particulate Class 1, PFAS/PFOS, Chlorine, taste, and odor reduction. 3,000 gal. capacity.
- Laminar flow provides a clean fill with minimal splash.
- Key plastic components are manufactured with silver ion antimicrobial agent** helping to provide clean, stain- and odor-free surfaces.
- Real Drain System eliminates standing water.

PART: _____ QTY: _____

PROJECT: _____

CONTACT: _____

DATE: _____

NOTES: _____

APPROVAL: _____

**Antimicrobial claims are in reference to components manufactured with antimicrobial agents, helping to provide clean, stain- and odor-free surfaces.

©2026 AquaTru, LLC. All Rights Reserved. 07.26.R1

AQUATru® BY IDEAL LIVING PRO SERIES

On-Wall Bottle Filler with Bubbler

Installation and Placement Drawings for the AquaTru On-Wall Bottle Filler with Bubbler

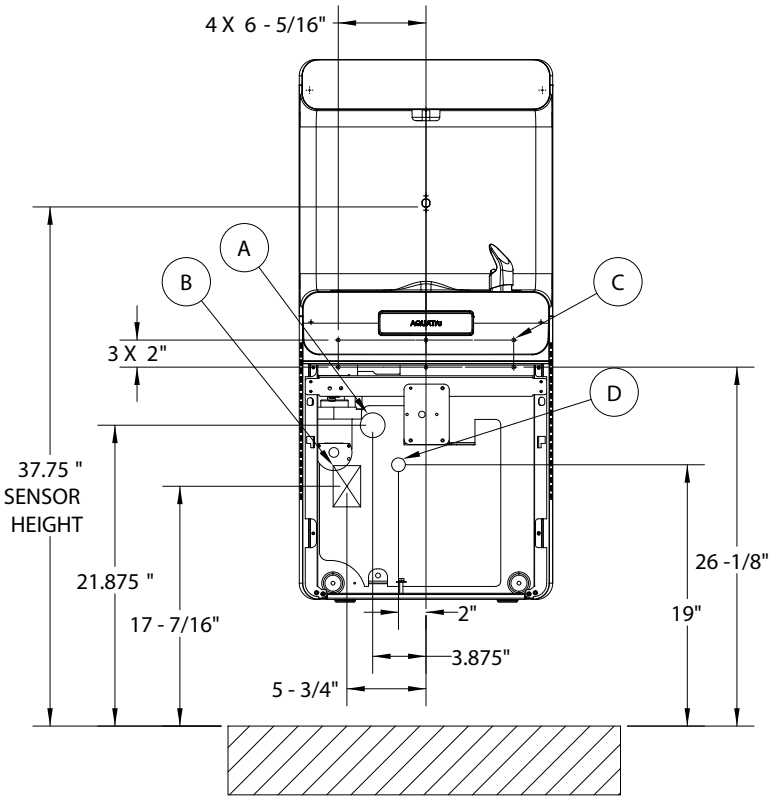

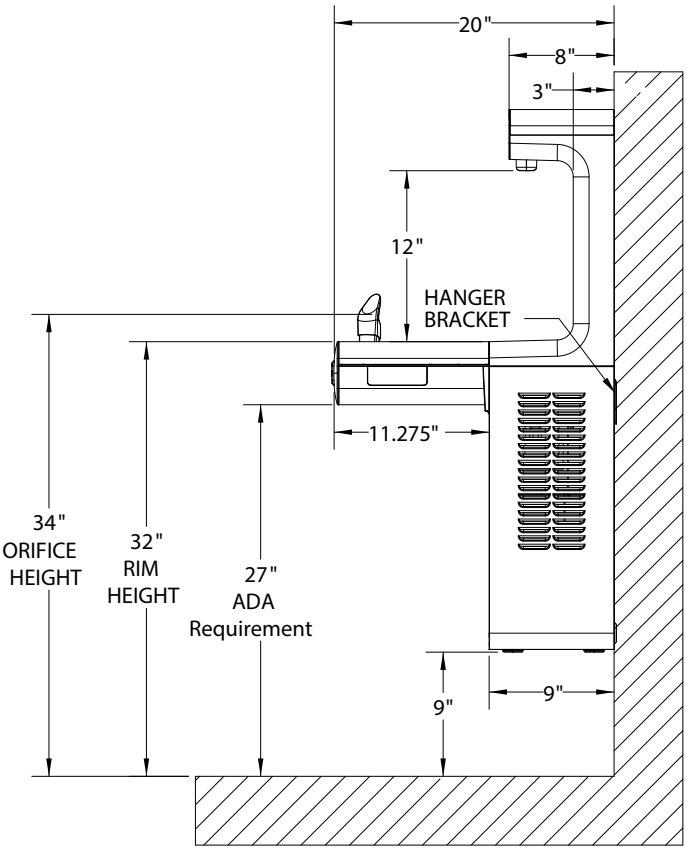

A. RECOMMENDED LOCATION FOR DRAIN CONNECTION
B. RECOMMENDED LOCATION FOR ELECTRICAL OUTLET
C. 6 X 9/32" HOLES FOR THE HANGER BRACKET
D. RECOMMEND WATER SUPPLY LOCATION

©2026 AquaTru, LLC. All Rights Reserved. 07.26.R1

AQUATru® BY IDEAL LIVING PRO SERIES

Optional Accessories

#	SKU	Description	Image
1	10AT01WBP65VRK	AquaTru Pro On-Wall Vandal Resistant Bubbler Upgrade Kit	
2	10AT01WBP83CA	AquaTru Pro On-Wall Cane Apron	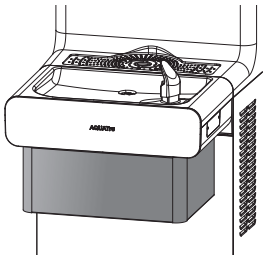

©2026 AquaTru, LLC. All Rights Reserved. 07.26.R1